FUEL SYSTEM

PRECAUTION

1. PRECAUTION

(a) Before working on the fuel system, disconnect the battery negative terminal.

(b) Do not work on the fuel system near fire. Never smoke during the work.

(c) Keep rubber and leather parts away from gasoline.

2. DISCHARGE FUEL SYSTEM PRESSURE

CAUTION:

- **Before removing fuel system parts, take precautions to prevent gasoline spillage.**
- **As some pressure remains in the fuel line even after taking precautions to prevent gasoline spillage, use a shop rag to prevent gasoline splashes when disconnecting the fuel line.**

(a) Disconnect the battery negative terminal.

(b) Remove the rear seat cushion (See page SE-18).

(c) Remove the rear floor service hole cover (See page FU-19).

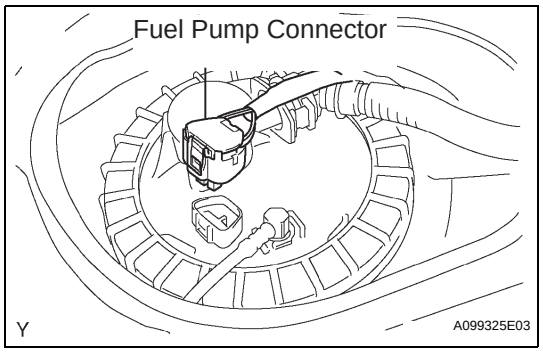

(d) Disconnect the fuel pump connector.

(e) Connect the engine wire (battery negative terminal).
Torque: 5.4 N*m (55 kgf*cm, 48 in.*lbf)

(f) Start the engine.

(g) After the engine stops, turn the ignition switch off.
HINT:
DTC P0171 (system to lean) may be present.

(h) Crank the engine again, and check that the engine does not start.

(i) Remove the fuel tank cap and discharge the pressure in the fuel tank completely.

(j) Disconnect the battery negative terminal.

(k) Connect the fuel pump connector.

(l) Install the rear floor service hole cover (See page FU-28).

(m) Install the rear seat cushion (See page SE-20).

(n) Connect the battery negative terminal.
Torque: 5.4 N*m (55 kgf*cm, 48 in.*lbf)

cardiagn.com

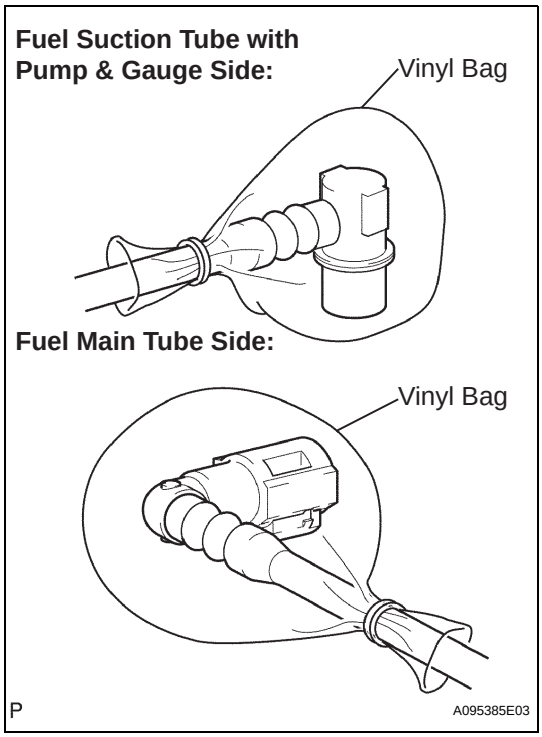

3. FUEL SYSTEM

(a) When disconnecting the high-pressure fuel line, a large amount of gasoline will splash. So take the following precautions:
(1) Discharge the fuel system pressure.
(2) Disconnect the fuel tube (See page FU-8).
(3) Release the pressure remaining in the fuel tank main tube.
(4) Cover the disconnected fuel tank main tube (fuel tube joint and fuel tube connector) with a vinyl bag to prevent damage and the intrusion of foreign objects.
(5) Put a container under the connection.

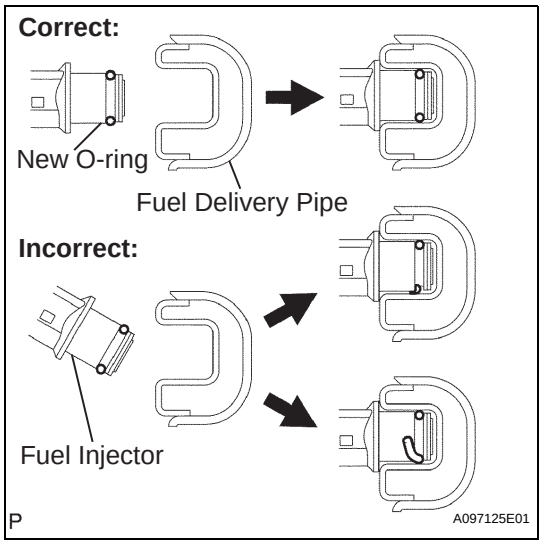

(b) Take the following precautions when removing and installing the fuel injector.
(1) Do not reuse the O-ring.
(2) Do not damage a new O-ring when installing it onto the fuel injector.
(3) Before installing a new O-ring, apply gasoline or spindle oil onto the fuel injector.
NOTICE:
Do not use engine oil, gear oil or brake oil.

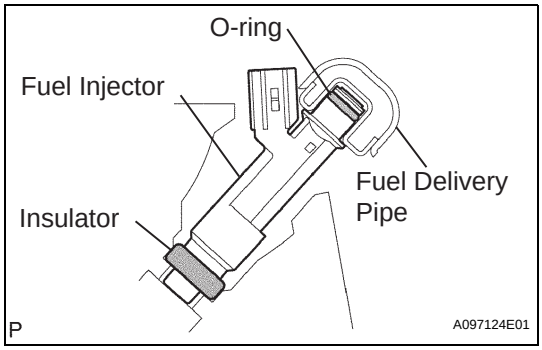

(4) Install the fuel injector onto the fuel delivery pipe and cylinder head as illustrated.
NOTICE:
Apply gasoline or spindle oil to the contact surface of the fuel delivery pipe and fuel injector before installing the fuel injector.

FU

cardiagn.com

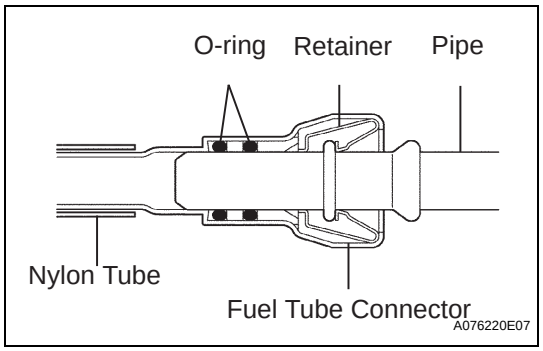

(c) Take the following precautions when disconnecting the fuel tube connector (metallic type).
HINT:
The structure of the fuel tube connector is as shown in the illustration.
(1) Check the fuel tube connector and pipe for dirt and mud before removing the fuel tube connector.
If dirty, wipe them with a shop rag.

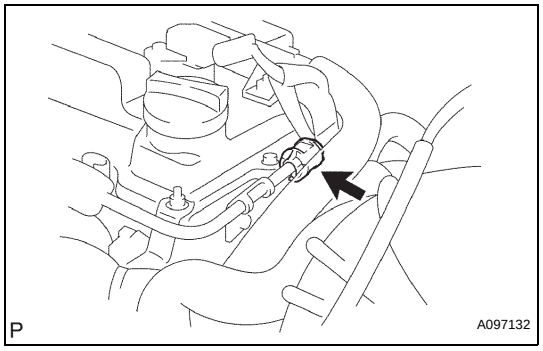

(2) Remove the fuel pipe clamp No. 2.
NOTICE:
Do not reuse the fuel pipe clamp that has been removed.

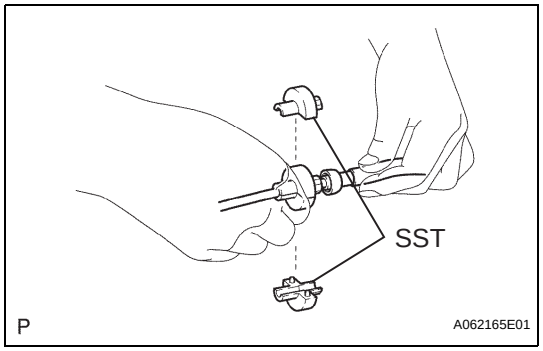

(3) Hold the metallic connector of the fuel tube assembly, then pull it out of the pipe and hold it as it is.
(4) Assemble SST to the connection as shown.
SST 09268-21010

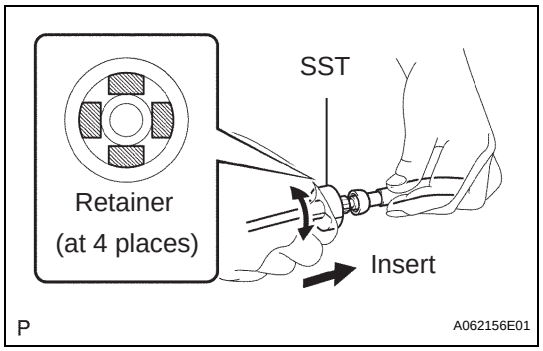

(5) Turn SST to align the retainer inside the fuel tube connector with the chamfered part of SST. Insert SST into the fuel tube connector.
(6) Hold SST in the position above, then push the fuel tube connector towards SST. Mount the retainer of the fuel tube connector onto the chamfered part of SST.
(7) Slide SST and the fuel tube connector together towards the fuel tube connector until they make a "click" sound.

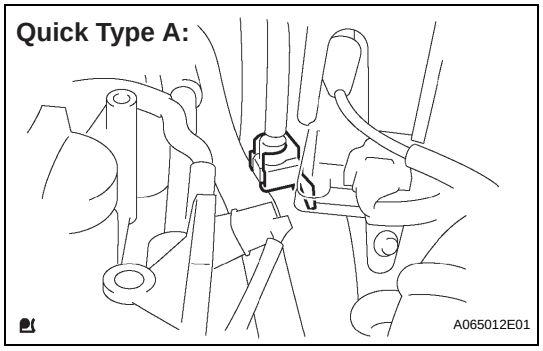

(d) Take the following precautions when disconnecting the fuel tube connector (quick type A).
(1) Remove the fuel pipe clamp No. 1.
(2) Check if there is any dirt and mud on the pipe and around the connector before disconnecting them and clean them away.

cardiagn.com

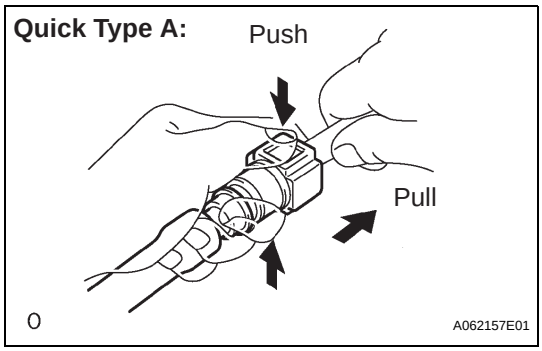

(3) Be sure to disconnect the connector by hand.
(4) When the connector and pipe are stuck, pinch the retainer by hand, then pull the connector out of the pipe.
NOTICE:
Do not use any tool.
(5) Check if there is any dirt on the seal surface of the disconnected pipe and clean it away.

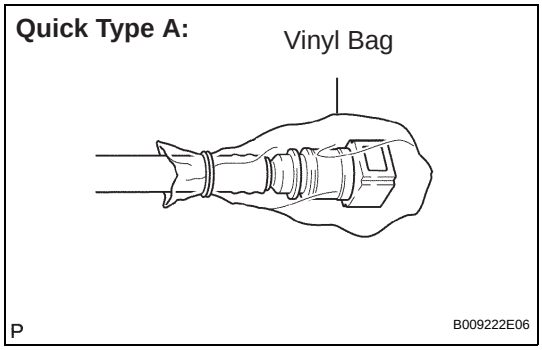

(6) Cover the disconnected pipe and connector with a vinyl bag to prevent damage and intrusion of foreign objects.

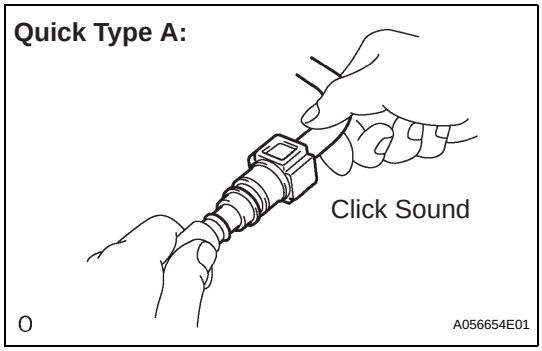

(e) Take the following precautions when connecting the fuel tube connector (quick type A).
(1) Align the axis of the connector with the axis of the pipe, and push the connector in until the retainer makes a "click" sound. If the connection is tight, apply a small amount of new engine oil to the tip of the pipe.
(2) After connecting the fuel tube connector, check that the fuel tube connector and pipe are securely connected by pulling them.

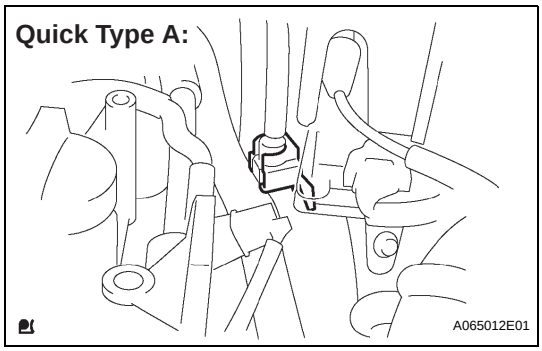

(3) Install the fuel pipe clamp.
(4) Check if there is any fuel leakage.

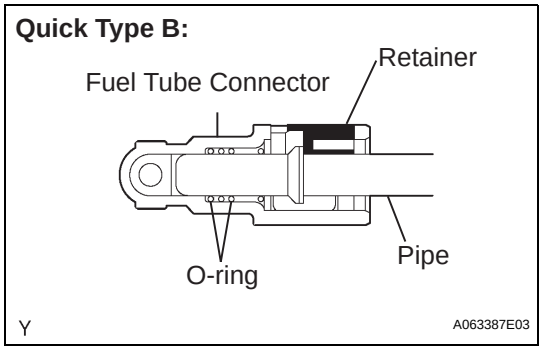

(f) Take the following precautions when removing the fuel tube connector (type B).
HINT:
The structure of the fuel tube connector is as shown in the illustration.
(1) Check the fuel tube connector and pipe for dirt and mud before removing the fuel tube connector.
If dirty, wipe it with a shop rag.

cardiagn.com

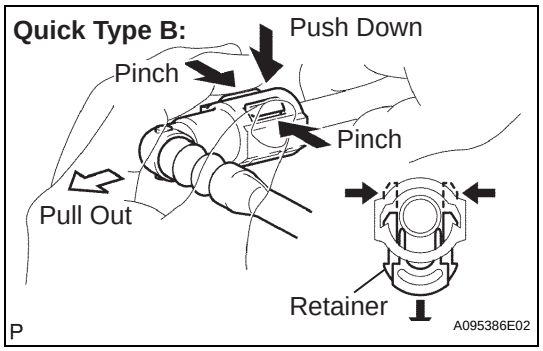

(2) Pinch the tabs of the retainer of the fuel tube connector to remove the lock claws and push it down as shown in the illustration.
(3) Pull the fuel tank main tube out of the pipe.

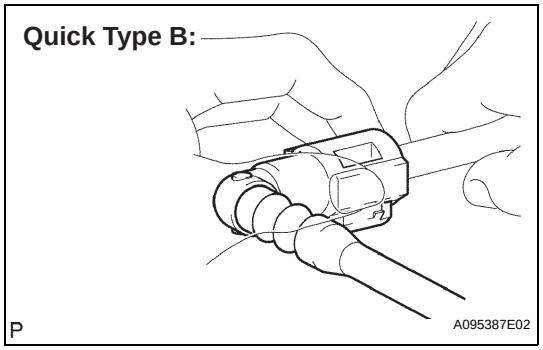

(4) If the fuel tube connector and pipe are stuck, pinch the pipe, then push and pull the fuel tube connector to release and disconnect the fuel tube connector.
NOTICE:
Never use any tools.
(5) After removing the fuel tube, check the sealing surface of the pipe for dirt and mud.
If dirty, wipe it with a shop rag.

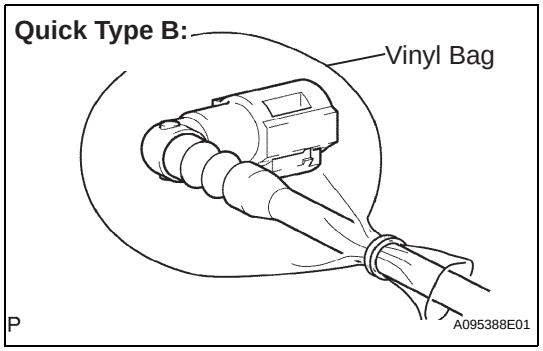

(6) Cover the disconnected fuel tube connector and pipe with a vinyl bag to prevent damage and intrusion of foreign objects.

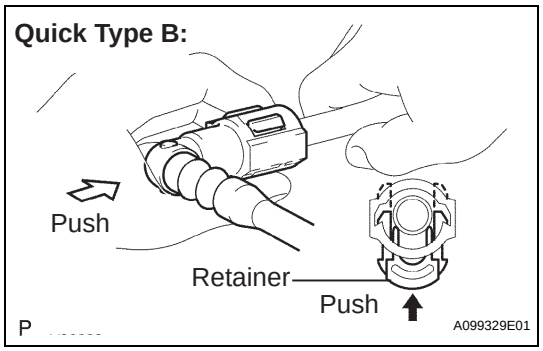

(g) Take the following precautions when installing the fuel tube connector (type B).
(1) Align the fuel tube connector with the pipe, then push the fuel tube connector in until it comes into contact with the seat, then push the retainer in until the claws lock.

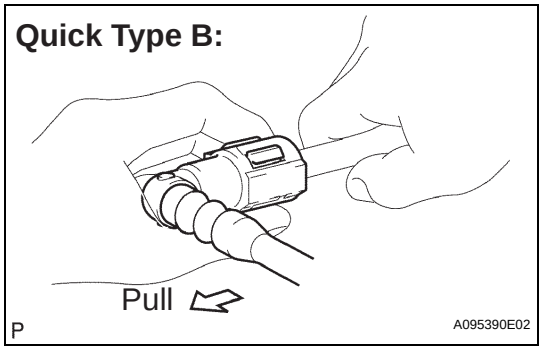

(2) After connecting the fuel tube connector, check that the fuel tube connector and pipe are securely connected by pulling them.

FU

cardiagn.com

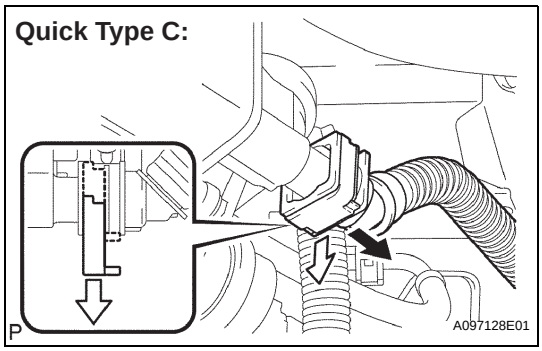

(h) Take the following precautions when disconnecting the fuel tube connector (quick type C).
(1) Check the pipe and around the connector for dirt and mud before disconnecting them. Clean them if necessary.
(2) Remove the checker of the fuel tube connector from the pipe.
(3) Pinch the tabs of the retainer of the fuel tube connector to remove the lock claws and slide it as shown in the illustration.
(4) Check the sealing surface of the disconnected pipe for dirt and mud. Clean them away if necessary.
(5) Cover the disconnected fuel tube connector and pipe with a vinyl bag to prevent damage and intrusion of foreign objects.

FU

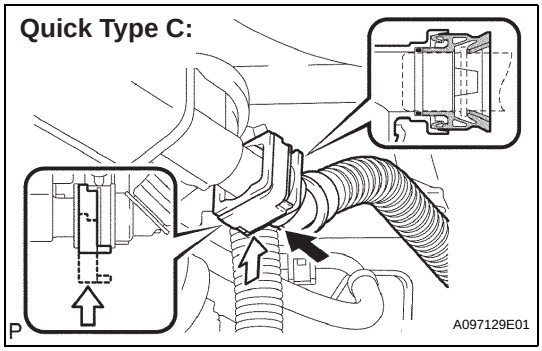

(i) Take the following precautions when connecting the fuel tube connector (quick type C).
(1) Check the connected part of the pipe for any damage and foreign objects.
(2) Align the fuel tube connector with the pipe, then push the fuel tube connector in until the retainer makes a "click" sound. If the connection is tight, apply a light coat of fresh engine oil to the tip of the pipe.
(3) Install the checker onto the pipe.
(4) Check for fuel leaks.

(j) Take the following precautions when handling nylon tube.
(1) Pay attention not to turn the connected part of the nylon tube and the quick connector forcibly when connecting them.
(2) Pay attention not to twist the nylon tube.
(3) Do not remove the nylon tube.
(4) Do not forcibly bend the nylon tube.

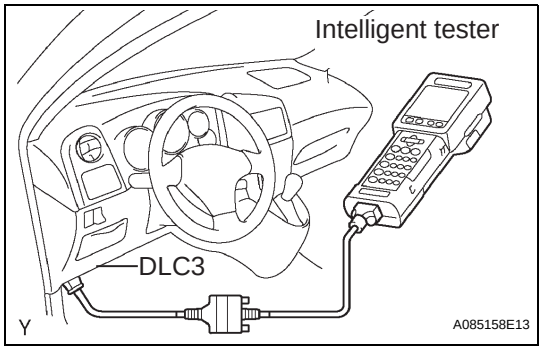

4. INSPECT FOR FUEL LEAK

(a) Check that there are no fuel leakage after doing maintenance anywhere on the fuel system.
(1) Connect the intelligent tester to the DLC3.
(2) Turn the ignition switch to the ON position.
NOTICE:
Do not start the engine.
(3) Turn the intelligent tester on.
(4) Select the following menu items: DIAGNOSIS / ENHANCED OBD II / ACTIVE TEST / FUEL PUMP/ SPD.

cardiagn.com

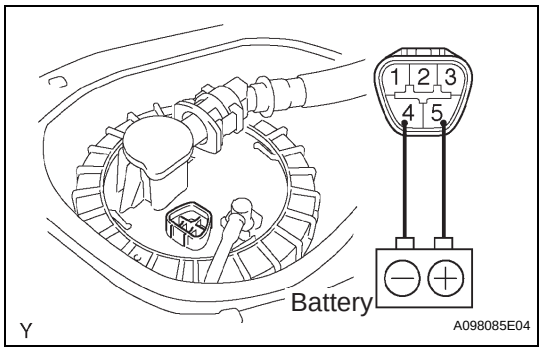

(5) If you have no intelligent tester, connect the positive (+) lead from the battery to terminal 5 of the connector, and the negative (-) lead to terminal 4.
NOTICE:
- **These tests must be done quickly (for less than 10 seconds) to prevent the coil from burning out.**
- **Keep the fuel pump as far away from the battery as possible.**
- **Always do the switching at the battery side.**

(6) Check that there are no leakage from any parts of the fuel system.
(7) Turn the intelligent tester off.
(8) Turn the ignition switch to the LOCK position.
(9) Disconnect the intelligent tester from the DLC3.

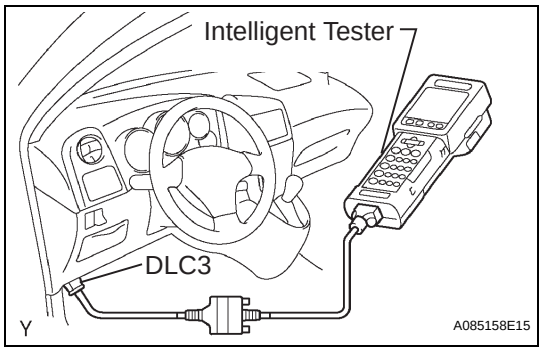

ON-VEHICLE INSPECTION

1. CHECK FUEL PUMP OPERATION

(a) Connect the intelligent tester to the DLC3.
(b) Turn the ignition switch to the ON position.
NOTICE:
Do not start the engine.
(c) Turn the intelligent tester on.
(d) Select the following menu items: DIAGNOSIS / ENHANCED OBD II / ACTIVE TEST / FUEL PUMP/ SPD.
(e) Check the fuel operation while operating it with the intelligent tester.
If the fuel pump does not operate, replace the fuel pump.

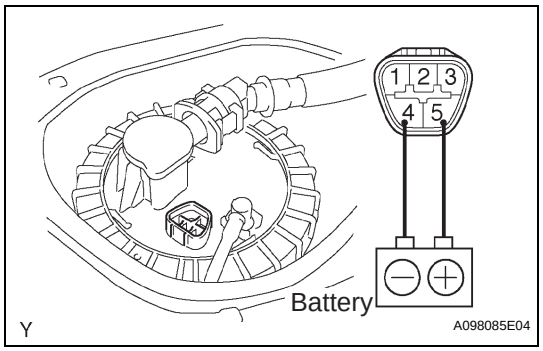

(f) If you have no intelligent tester, connect the positive (+) lead from the battery to terminal 5 of the connector, and the negative (-) lead to terminal 4.
NOTICE:
- **These tests must be done quickly (for less than 10 seconds) to prevent the coil from burning out.**
- **Keep the fuel pump as far away from the battery as possible.**
- **Always do the switching at the battery side.**

(g) Check that there is pressure remaining in the fuel inlet pipe from the fuel line.
HINT:
If there is fuel pressure, you will hear the sound of fuel flow. If there is no fuel pressure, check these parts: Fusible link, Fuses, Main relay, Fuel pump, ECM and Wire harness.
(h) Turn the intelligent tester off.
(i) Turn the ignition switch to the LOCK position.
(j) Disconnect the intelligent tester from the DLC3.

cardiagn.com

2. CHECK FUEL PRESSURE

(a) Using a voltmeter, measure the battery voltage.
Standard voltage:
11 to 14 V

(b) Discharge fuel system pressure (See page FU-1).

(c) Disconnect the cable from the negative (-) battery terminal.

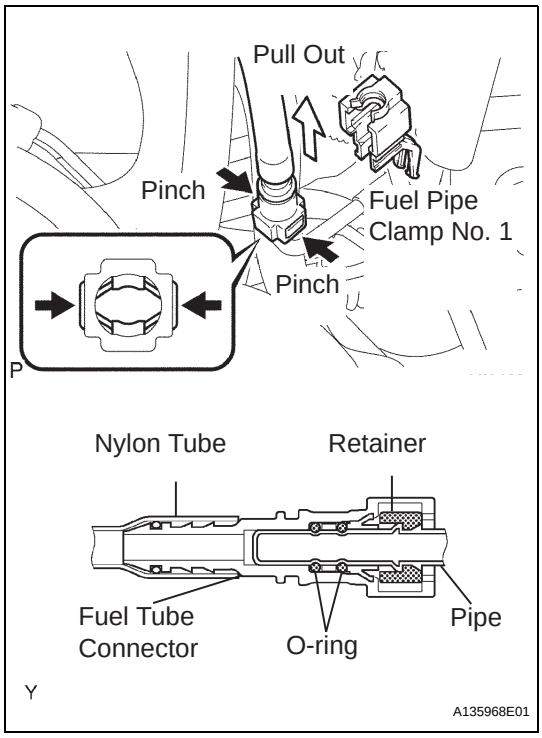

(d) Remove the fuel pipe clamp No. 1.

(e) Pinch the retainer of the fuel tube connector, then pull the fuel tube connector out of the pipe to disconnect the fuel tube.

NOTICE:

- **Check that there is no dirt or other foreign objects around the connector before disconnecting it. Clean the connector if necessary.**
- **It is necessary to prevent mud or dirt from entering the connector. If mud or dirt gets in the connector, the O-rings may not seal properly.**
- **Only disconnect the quick connector by hand.**
- **Do not bend, kink or twist the nylon tubes.**
- **Protect the connector by covering it with a plastic bag.**
- **If the pipe and connector are stuck, carefully try wiggling or pushing and pulling on the connector to release it. Pull the connector off the pipe carefully.**

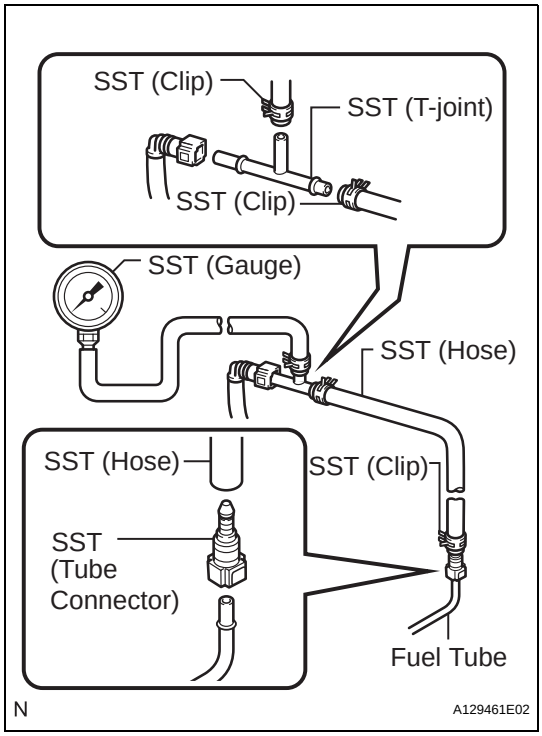

(f) Install SST and the fuel tube connector into the vehicle.

SST 09268-31011 (09268-41500, 90467-13001, 95336-08070), 09268-45014 (09268-41200, 09268-41220, 09268-41250)

(g) Wipe off any split gasoline.

(h) Connect the cable to the negative (-) battery terminal.
Torque: 5.4 N*m (55 kgf*cm, 48 in.*lbf)

cardiagn.com

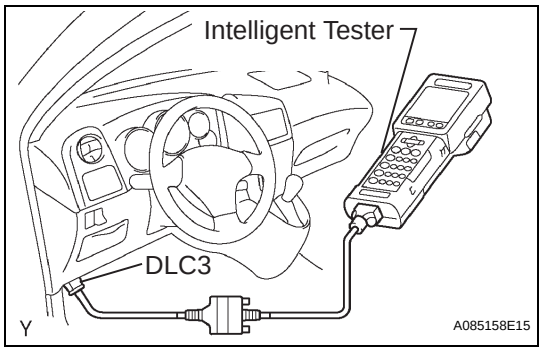

(i) Connect the intelligent tester to the DLC3.
(j) Turn the ignition switch to the ON position.
(k) Turn the intelligent tester on.
(l) Select the following menu items: DIAGNOSIS / ENHANCED OBD II / ACTIVE TEST / FUEL PUMP/ SPD.

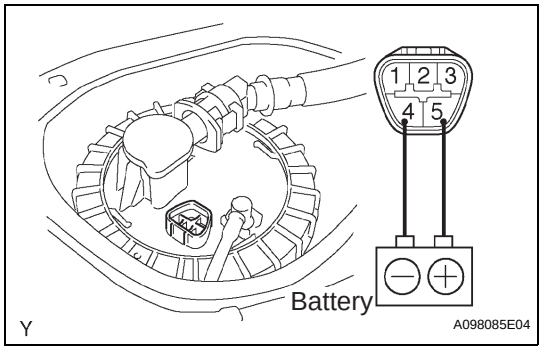

(m) If you have no intelligent tester, connect the positive (+) lead from the battery to terminal 5 of the connector, and the negative (-) lead to terminal 4.
(n) Measure the fuel pressure.
Standard:

304 to 343 kPa (3.1 to 3.5 kgf/cm^2, 44 to 50 psi)

- If the fuel pressure is greater than the standard value, replace the fuel pump.
- If the fuel pressure is less than the standard value, check the connection of the fuel hose and fuel pump.

(o) Disconnect the intelligent tester from the DLC3.
(p) Start the engine.
(q) Measure the fuel pressure when the engine idles.
Standard:

304 to 343 kPa (3.1 to 3.5 kgf/cm^2, 44 to 50 psi)

(r) Stop the engine.
(s) After stopping the engine, check that the fuel pressure does not change for 5 minutes.
Standard:

147 kPa (1.5 kgf/cm^2, 21 psi) or more

If the fuel pressure is not as specified, check the fuel pump or fuel injector.

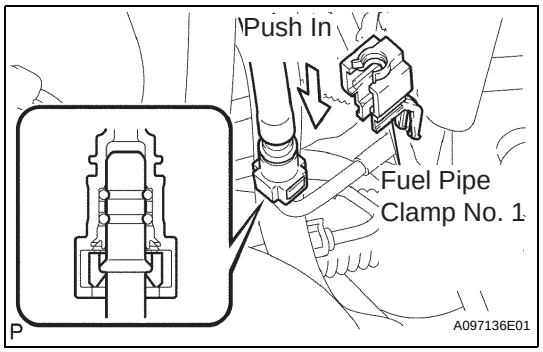

(t) Connect the fuel tube.
(1) Align the fuel tube connector with the pipe, then push the fuel tube connector in until the retainer makes a "click" sound to connect the fuel tube to the pipe.
NOTICE:
- **Check that there are no scratches or foreign objects around the connected part of the fuel tube connector and pipe before performing this work.**
- **After connecting the fuel tube, check that the fuel tube is securely connected by pulling the fuel tube connector.**

(u) Install the fuel pipe clamp No. 1.
(v) Check for fuel leaks (See page FU-1).

FU

cardiagn.com